Visions
Turning visions into reality

Quick view hire list

Rigging & Deck

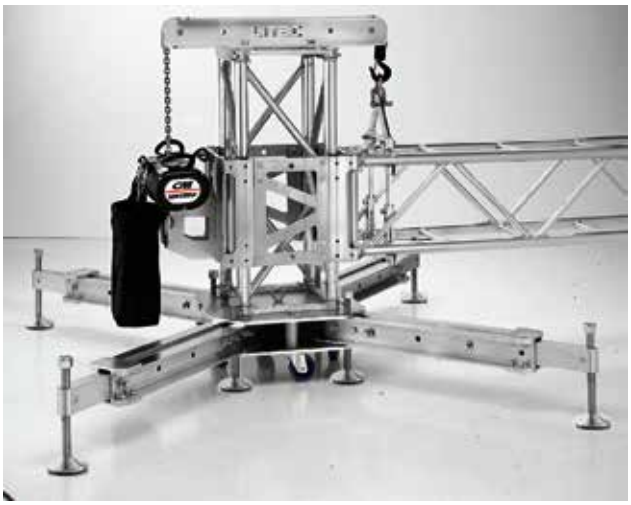

QX30 / QX30s - Lengths 0.1/0.51/1.5/2/2.5/3m
FX30 - Lengths 0.5/1/2/3m
QD30 - Lengths 1/1.5/2.5/3m
QF40 - Lengths 1/2.5/3m
Dados - QD30 / QX30 / FX30
Vari Tower 3/30
500Kg CM Loadstar
Steels - Guy & Safety
Aluminium base plate 1m x 1m / 0.6m x 0.6m
All other Shackels / O-Rings / Spansets

Litedeck 4'x4' / 8'x4' / 4'x2' / 8'x2' / 4'Triangle / 4' Circle
Prolyte Deck 1m x 2m
Steeldeck 4' x 4'
Legs 9" / 12" / 18" / 24" / 2'6" / 3' / 4' / 5' / 6'
3'Treads Steeldeck / 2' Treads Wooden
Litedeck Handrail 8' / 4'

lighting & Control

Robe LED Spiider / Spikie / LED Beam 150
Robe Discharge Pointe / Colour Spot / Wash 575 / 250
GLP Impression 90
Source Four 10/19/26/36/50 Degree
Fresnel 650w/1.2Kw/2Kw
Black & White 4 Way Pinspot Banks
2 Way Blinders
Smartbats Wireless Uplighters
GDS Wireless Uplighters
Miltec Batterns
Showtec Vintage Blaze '55
Jands Vista T2
Avolites Quatz
Avolites Tiger
Avolites Powercube
W-DMX Access Point
Smartbat Wireless Access Point

0870 042 2602
info@visionsgroup.co.uk

Visions
Turning visions into reality

Quick view hire list

Sound

D&B E3 & Epacs
D&B C690 / C6 / C-Sub & P1200
D&B Y7P / B6 & D20
D&B T10 & D12
D&B M4 Monitors & D12

Sennheiser G3 Single / Dual / Quad
Shure MX412 Kits
T-bone SC-140 Kits
Yamaha LS9 16
Soundcraft Zed10 / Zed60

K&M Speaker Stands / Round Base
K&M Dual Mount Brackets / Distance Rod

Distro

	In	Plock	125A/3	125A/1	63A/3	63A/1	32A/3	32A/1	16A/1	13A	Soca
VESD1	400A PL				16			3			
VESD2	400A PL			3	1	1		2	6		
VESD3	400A PL	1			1		2				
VESD4	400A PL	1									
VESD5	400A PL	1	1		3	3	2				
VESD6	400A PL	1	2		2	3	2				
VESD7	125A/3				1		3	12	18		
VESD8	125A/3				2						
VESD9	125A/3			3	1						
VESD10	125A/3				1		2	6	12		
VESD11	125A/1								10		
VESD12	125A/1					1		1	3		
VESD13	125A/1					2					
VESD14	125A/1							4	8		
VESD15	Tails			1							
VESD16	63A/3				1		1	3	9		
VESD17	63A/3						2				
VESD18	63A/3						2	6	6		
VESD19	63A/3							3	6		
VESD20	63A/3					3	1				
VESD21	63A/3							5	2		
VESD22	63A/3				1						
VESD23	63A/3							6			
VESD24	63A/3				1			3	6		
VESD25	63A/3				1						3
VESD26	63A/1					1		2	4		
VESD27	63A/1							2	6		
VESD28	63A/1								6		
VESD29	63A/1								9		
VESD30	32A/3								3		
VESD31	32A/3							3			
VESD32	32A/3						1		9		
VESD33	32A/1								4		
VESD34	32A/1								6		
VESD35	16A/1								1	6	

0870 042 2602
info@visionsgroup.co.uk

Turning visions into reality

Quick view hire list

Audio Visual

LG Screens - FHD 42" / 49" / 65"
Panasonc - FHD 58"
Samsung - FHD 75"
Xeed 6010 Projectors
Barco CLM R10+
Barco RLM R12+
Barco TLD Lens Options
Xeed Lens Options
XP/LX Lens Options
Fastfold Screens
18mm LED Screen

Barco DCS 200 Switcher
Barco Image Pro HD
Barco Presentation Pro HD
Tricaster 455

Black Magic / Roland Format Converters
Black Magic Fibre System

Canon XF305 HD Cameras
Sony DXC D55 Camera Channels

Set & Graphics

Stage Braces / Weights
Perspex Lecterns
Trilite Lecterns
Plasma Hides
Pedestals / Plinths

Twist System Hire
Roller Banner Print
Foamex Board Print
Fabric Wrap Print
PVC Banner Print

0870 042 2602
info@visionsgroup.co.uk

QD30 TRUSS SYSTEM TECHNICAL DATA

QD30

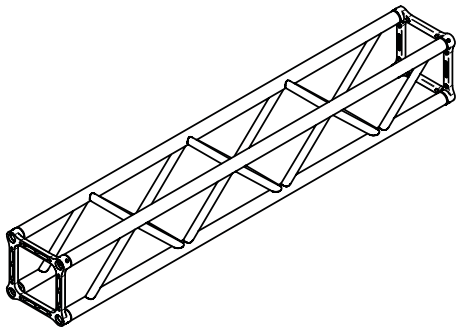

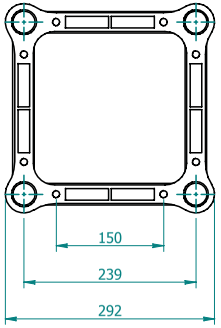

Description	Specification
External dimensions (height x width)	292 mm x 292 mm
Distance between axis	239 mm x 239 mm
Lenghtways tubes	Extruded aluminium EN-AW 6082 T6 – Ø 50x3 mm
Crossways tubes	Extruded aluminium EN-AW 6082 T6 – Ø 30x3 mm
Connecting plate	Cast aluminium EN AC 47000
Welding process	TIG (UNI 8634 / DIN 4113)
Available length [cm]	10,5 – 21 - 25 – 50 – 100 – 150 – 200 – 250 – 300 – 350 - 400

Section Area [mm²]	Moment of Inertia Y – axis [mm⁴]	Moment of Inertia Z – axis [mm⁴]	Allowable bending moment Y – axis [kNm]	Allowable bending moment Z – axis [kNm]	Selfweight (approx.) [N/m]
1772	25.472.864	25.472.864	9,03	9,03	76,0

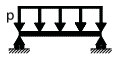

QD30 uniformly distributed load

Deflection [mm]

Load [Kg/m] \ Truss length [mm]	6	7	8	9	10	11	12	13	14	15	16	17
240	23											
220	21											
200	19											
180	17	31										
160	15	28										
140	13	24	42									
120	11	21	38									
100	9	17	30	48								
80	8	14	24	38	58	85						
60	6	10	18	29	44	64	90	120				
40	4	7	12	19	29	42	60	83	111	147		
20	2	3	6	10	15	21	30	41	56	73	95	121

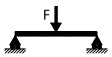

QD30 centre point load

Deflection [mm]

Load [Kg] \ Truss length [mm]	6	7	8	9	10	11	12	13	14	15	16	17
600	15											
560	14											
520	13	21										
480	12	19										
440	11	18	26									
400	10	16	24	34								
360	9	14	21	30	42							
320	8	13	19	27	37	49	64					
280	7	11	17	24	33	43	56	71				
240	6	10	14	20	28	37	48	61	76	94		
200	5	8	12	17	23	31	40	51	64	78	95	114
160	4	6	10	14	19	25	32	41	51	63	76	91

These technical data are not valid for circular truss.
These technical data are valid only for structures entirely assembled with Litec materials.

QF40 TRUSS SYSTEM TECHNICAL DATA

QF40

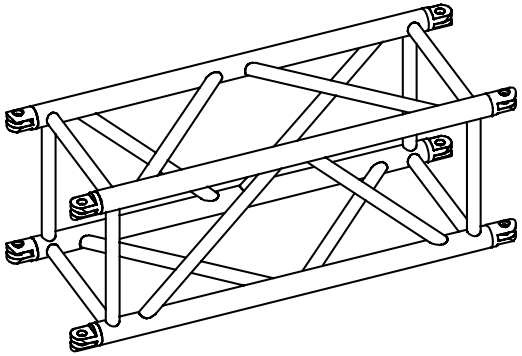

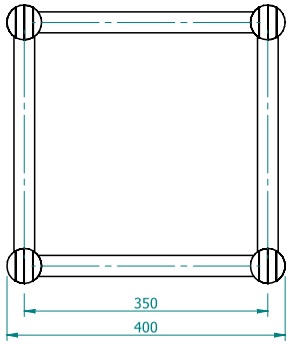

Description	Specification
External dimensions (height x width)	400 mm x 400 mm (20½" x 20½")
Distance between axis	350 mm x 350 mm (18½" x 18½")
Lenghtways tubes	Extruded aluminium EN-AW 6082 T6 - Ø 50x4mm
Crossways tubes	Extruded aluminium EN-AW 6082 T6 – Ø 30x3mm
Connecting Fork	Aluminium EN-AW 6082 T6
Welding process	TIG (UNI 8634 / DIN 4113)
Available length [cm]	100 – 150 – 200 – 250 – 300 – 350 - 400

Section Area [mm²]	Moment of Inertia Y – axis [mm⁴]	Moment of Inertia Z – axis [mm⁴]	Allowable bending moment Y – axis [kNm]	moment Z – axis	Selfweight (approx.) [N/m]
1772	46.541.200	46.541.200	26,46	-	116,7

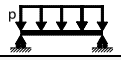

QF40 uniformly distributed load

Deflection [mm]

Load [Kg/m] \ Truss length [m]	6	7	8	9	10	11	12	13	14	15	16	17	18
600													
550	28												
500	26												
450	23	43											
400	21	38											
350	18	33	57										
300	15	29	49										
250	13	24	41	65									
200	10	19	33	52	80								
150	8	14	24	39	60	87							
100	5	10	16	26	40	58	82	114	153				
50	3	5	8	13	20	29	41	57	76	101	130	166	209

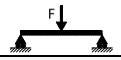

QF40 centre point load

Deflection [mm]

Load [Kg] \ Truss length [m]	6	7	8	9	10	11	12	13	14	15	16	17	18
1500	21												
1400	19	31											
1300	18	28	42										
1200	16	26	39										
1100	15	24	36	51									
1000	14	22	33	46	64								
900	12	20	29	42	57	76							
800	11	17	26	37	51	68	88						
700	10	15	23	32	45	59	77	98	122				
600	8	13	20	28	38	51	66	84	105	129			
500	7	11	16	23	32	42	55	70	87	107	130	156	
400	5	9	13	19	25	34	44	56	70	86	104	125	148

These technical data are not valid for circular truss.
These technical data are valid only for structures entirely assembled with Litec materials.

LITEC	**FX30S TRUSS SYSTEM** TECHNICAL DATA	FX30S

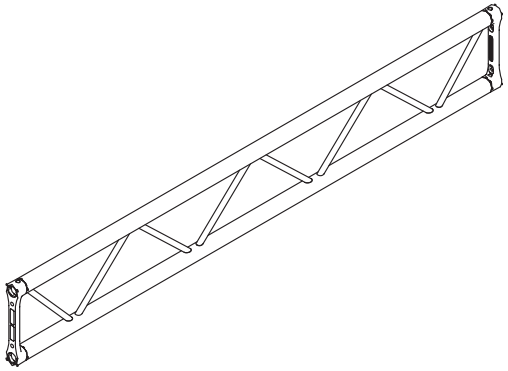

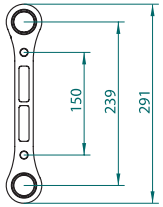

Description	Specification
External dimensions (height x width)	291 mm x 50 mm
Distance between axis	239 mm
Lenghtways tubes	Extruded alluminium EN AW 6082 T6 - Ø50x2mm
Crossways tubes	Extruded alluminium EN AW 6082 T6 - Ø18x2mm
Connecting plate	Cast alluminium EN AC 42200 T6
Welding process	TIG -141 / ISO 4063
Available lenght (cm)	10.5 - 21 - 25 - 50 - 100 - 150 - 200 - 250 - 300 - 350 - 400
Connection systems	FXFC - FXSM10

Section Area [mm²]	Moment of inertia Y - axis [mm4]	Moment of inertia Z - axis [mm4]	Selfweight (approx.) [N/m]		
604	7.469.500	174.019	30		

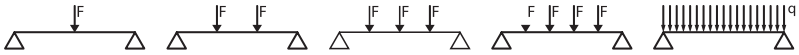

	Centre Point Load (C.P.L.)			Third Point Load (T.P.L.)			Quarter Point Load (Q.P.L.)			Fifth Point Load (F.P.L.)			Uniformly Distributed Load (U.D.L.)		
Span [m]	Point Load [kg]	Full Load [kg]	Central Deflection [mm]	Point Load [kg]	Full Load [kg]	Central Deflection [mm]	Point Load [kg]	Full Load [kg]	Central Deflection [mm]	Point Load [kg]	Full Load [kg]	Central Deflection [mm]	Load [kg/m]	Full Load [kg]	Central Deflection [mm]
1	1120	1120	0,38	585	1169	0,34	390	1169	0,31	292	1169	0,30	1170	1169	0,25
2	423	423	1,16	274	549	1,28	195	586	1,26	152	610	1,26	366	732	1,25
3	123	123	1,16	79	158	1,27	56	169	1,27	44	176	1,26	70	211	1,25
4	48	48	1,18	31	62	1,27	22	67	1,27	17	69	1,26	21	83	1,25
5	21	21	1,22	13	26	1,27	10	29	1,28	7	29	1,25	7	35	1,25
6	9	9	1,28	5	10	1,26	4	11	1,30	3	11	1,25	2	13	1,25

Load table has been prepared in accordance with UNI ENV 1999-1-1 (Eurocode 9).
When calculating the allowable loads shown in the table, it is assumed that the trusses are simply supported at the end connection and that static loads will be applied to the node points.
The application of the load shall be on the centre line of the truss.
The values shown in the table are the allowable statics loads that can be applied to the truss. This is the live load or the payload.
The self weight of the truss has been taken into account when calculating the values in the table.
It should be noted that this are idealised loading condition and the User shall re-analyze the truss for the loading condition which prevail for the application begin considered.

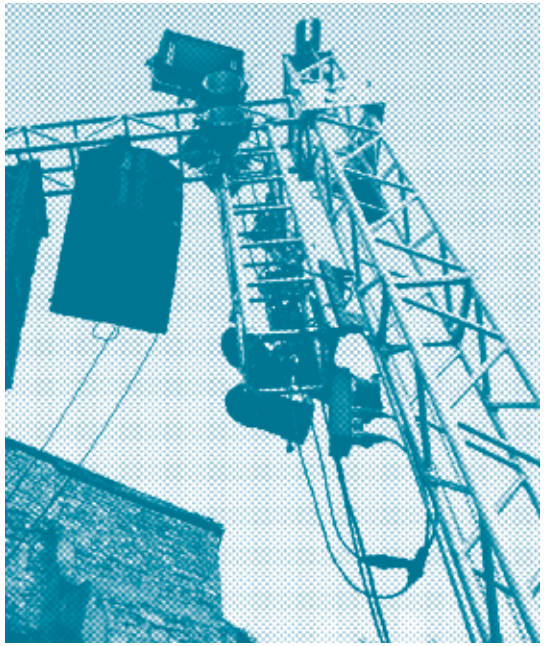

VARITOWER3

It substitutes the previous model Varitower 2. It can take a 29 or 40 m vertical truss, with the best performance seen from the QH40SA twist-resistant truss. The sleeve block is of the original design developed and tested for Unitower, with the same extruded profiles and the same applications.

	VT3-30	VT3-40
Maximum tower height	8 m	9 m
Lifting system	chain hoist	chain hoist
Base module weight (included legs, top, and sleeve block)	140 kg	145 kg
Vertical main truss	QH30SA	QH40SA
Compatible trusses	QX30SA / QH30SA / QX40SA / QH40SA / TX30S (TX40S only for VT3-40)	
Base module height (excluding top)	130 cm	130 cm
Base module dimensions (folded versions)	60 x 60 cm	60 x 60 cm
Base module dimensions (operating versions)	240 x 240 cm	240 x 240 cm
Legs maximum extension	97 cm	97 cm
Maximum lifting load capacity	1800 kg	2000 kg

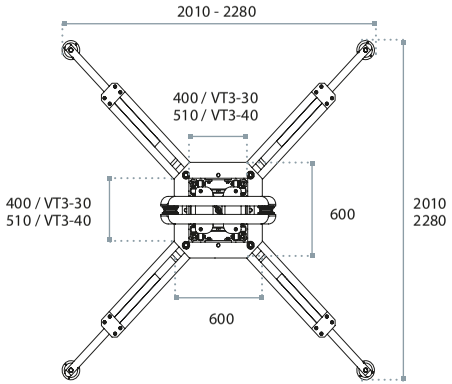

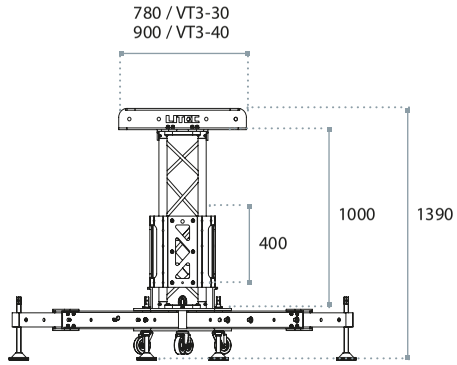

QX30 TRUSS SYSTEM TECHNICAL DATA

QX30

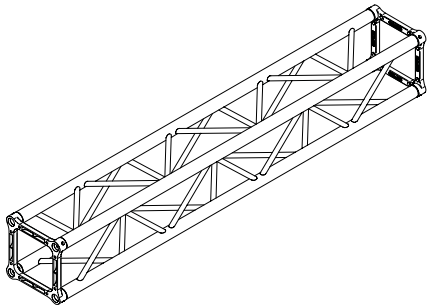

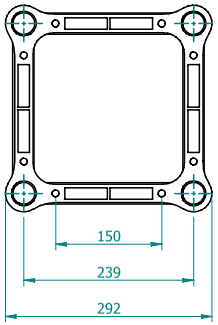

Description	Specification
External dimensions (height x width)	292 mm x 292 mm
Distance between axis	239 mm x 239 mm
Lenghtways tubes	Extruded aluminium EN-AW 6082 T6 - Ø 50x2mm
Crossways tubes	Extruded aluminium EN-AW 6060 T6 - Ø 20x2mm
Connecting plate	Cast aluminium EN AC 47000
Welding process	TIG (UNI 8634 / DIN 4113)
Available length [cm]	10,5 – 21 - 25 – 42 - 50 – 100 – 150 – 200 – 250 – 300 – 350 - 400

Section Area [mm²]	Moment of Inertia Y – axis [mm⁴]	Moment of Inertia Z – axis [mm⁴]	Allowable bending moment Y – axis [kNm]	Allowable bending moment Z – axis [kNm]	Selfweight (approx.) [N/m]
1206	17.731.775	17.731.775	6,16	6,16	57,9

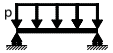

QX30 uniformly distributed load

Deflection [mm]

Load [Kg/m] \ Truss length [m]	6	7	8	9	10	11	12	13	14	15
130	18									
120	17	31								
110	15	28								
100	14	26	44							
90	12	23	39							
80	11	20	35	56						
70	10	18	30	49						
60	8	15	26	42	64	93				
50	7	13	22	35	53	78				
40	6	10	17	28	43	62	88	122		
30	4	8	13	21	32	47	66	91	123	
20	3	5	9	14	21	31	44	61	82	108

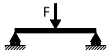

QX30 centre point load

Deflection [mm]

Load [Kg] \ Truss length [m]	6	7	8	9	10	11	12	13	14	15
400	15									
375	14	22								
350	13	20								
325	12	19	28							
300	11	18	26							
275	10	16	24	34						
250	9	15	22	31	43					
225	8	13	20	28	38	51				
200	7	12	17	25	34	45	59	75		
175	6	10	15	22	30	40	51	65	82	101
150	6	9	13	19	26	34	44	56	70	86
125	5	7	11	16	21	28	37	47	58	72

You can find in the catalogue the available dimensions of truss and respective weights.
These technical data are not valid for circular truss.
These technical data are valid only for structures entirely assembled with Litec materials.

QX30S TRUSS SYSTEM TECHNICAL DATA

QX30S

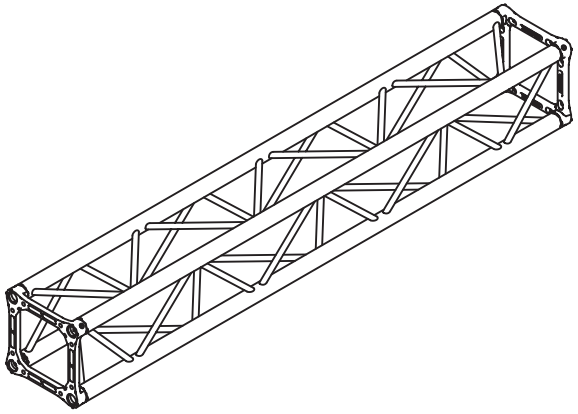

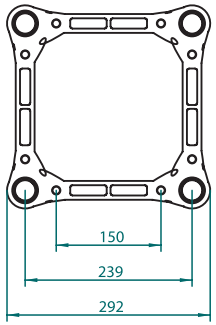

Description	Specification
External dimensions (height x width)	292 mm x 292 mm
Distance between axis	239 mm x 239 mm
Lenghtways tubes	Extruded alluminium EN AW 6082 T6 - Ø50x2mm
Crossways tubes	Extruded alluminium EN AW 6082 T6 - Ø18x2mm
Connecting plate	Cast alluminium EN AC 42200 T6
Welding process	TIG -141/ISO 4063
Available lenght (cm)	10.5 - 21 - 25 - 29 - 42 - 50 - 100 - 150 - 200 - 250 - 300 - 350 - 400
Connection systems	QXFC - QXSM10

Section Area [mm²]	Moment of inertia Y - axis [mm4]	Moment of inertia Z - axis [mm4]	Selfweight (approx.) [N/m]		
1206	14.939.000	14.939.000	60		

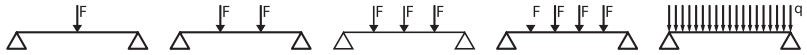

Span [m]	Centre Point Load (C.P.L.) Point Load [kg]	Full Load [kg]	Central Deflection [mm]	Third Point Load (T.P.L.) Point Load [kg]	Full Load [kg]	Central Deflection [mm]	Quarter Point Load (Q.P.L.) Point Load [kg]	Full Load [kg]	Central Deflection [mm]	Fifth Point Load (F.P.L.) Point Load [kg]	Full Load [kg]	Central Deflection [mm]	Uniformly Distributed Load (U.D.L.) Load [kg/m]	Full Load [kg]	Central Deflection [mm]
1	2319	2319	0,4	1168	2337	0,3	779	2337	0,3	584	2337	0,3	2337	2337	0,2
2	1556	1556	2	998	1996	2	771	2313	2	583	2331	2	1166	2331	2
3	1157	1157	5	775	1550	6	620	1860	7	501	2006	7	775	2325	7
4	916	916	10	629	1258	12	501	1504	13	393	1573	13	530	2121	15
5	756	756	16	527	1055	19	406	1218	21	322	1289	21	342	1711	23
6	640	640	24	452	904	29	340	1020	30	272	1087	31	239	1431	34
7	553	553	34	394	788	40	291	873	42	235	939	43	175	1224	46
8	485	485	45	349	698	54	254	762	55	205	821	56	133	1061	60
9	430	430	57	311	622	70	224	673	70	182	729	72	104	933	76
10	386	386	72	280	560	87	200	600	87	163	652	90	83	830	94
11	347	347	87	253	507	106	180	540	105	147	587	109	67	741	114
12	315	315	105	231	462	128	162	487	126	133	530	130	56	667	135
13	287	287	124	211	422	152	147	442	148	121	483	154	47	607	159
14	262	262	146	193	387	177	135	404	173	110	441	179	39	550	184
15	240	240	169	178	356	205	123	369	198	101	406	207	33	500	210
16	220	220	193	164	329	235	113	338	226	93	370	235	29	461	241

Load table has been prepared in accordance with UNI ENV 1999-1-1 (Eurocode 9).
When calculating the allowable loads shown in the table, it is assumed that the trusses are simply supported at the end connection and that static loads will be applied to the node points.
The application of the load shall be on the centre line of the truss.
The values shown in the table are the allowable statics loads that can be applied to the truss. This is the live load or the payload.
The self weight of the truss has been taken into account when calculating the values in the table.
It should be noted that this are idealised loading condition and the User shall re-analyze the truss for the loading condition which prevail for the application begin considered.